# Product Information

## 9250STP250P65

EAN 4031582314038

Swivel caster, housing and plate steel-welded, zinc plated, blue passivated, sealed swivel bearing with dual purpose bearing and tapered roller bearing, threaded king pin and locking nut secured, grease nipple, wheel axle with nut. Wheel center made of pressed steel, lacquered, heavy duty, Tread: Polyurethane, casted, precision ball bearing, plate fitting

### Technical Data

| | |
|---|---|
| Wheel diameter | 9.84 in |
| Tread width | 3.94 in |
| Plate size | 7.87 x 6.30 in |
| Plate hole centers | 6.30 x 4.72 in |
| Plate hole | 0.59 in |
| Offset | 2.95 in |
| Swivel Interference | 15.75 in |
| Overall height | 12.80 in |
| Temperature | - 4 / + 140 °F |
| Standard | EN 12533 |
| Weight | 74.133 lbs |
| Load capacity (dynamic) | 4850 lbs |
| Load capacity (static) | 9700 lbs |
| Swivel Radius | 7.87 in |
| Hardness of tread | A 92 Shore |

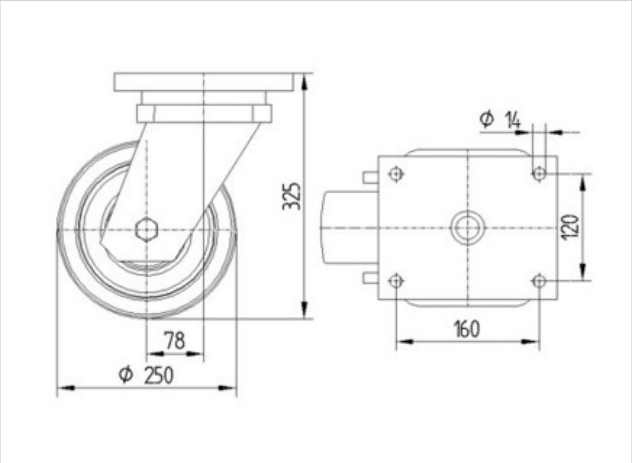


| | |
|---|---|
| Roll performance | + + + + + |
| Movement noise | + + + + + |
| Attrition | + + + + + |
| Corrosion resistance | + + + + + |

© Copyright 2012, TENTE International, www.tente.com, 02/09/2012

# Product Information

## 9250STP250P65

EAN 4031582314038

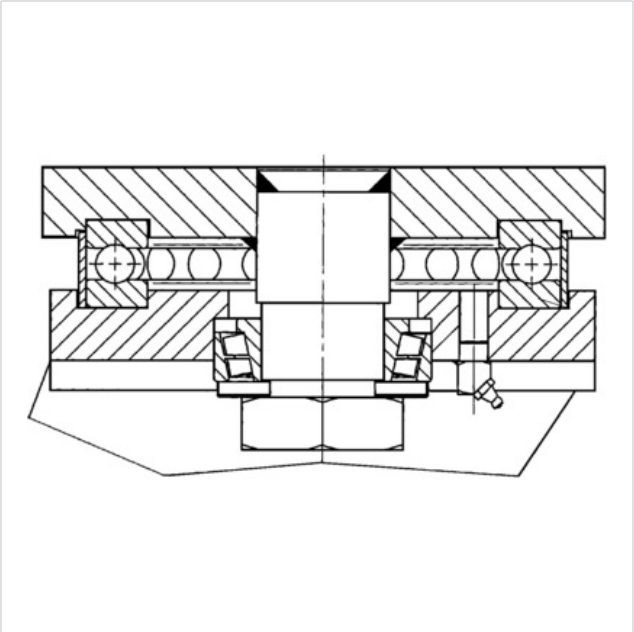

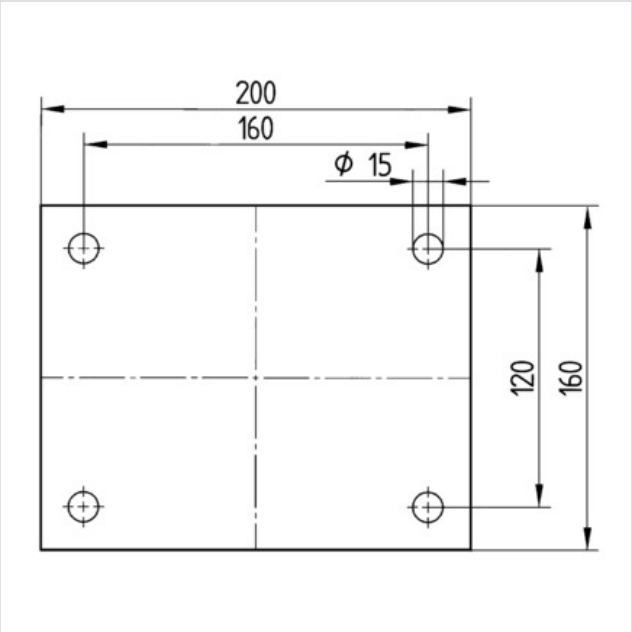


© Copyright 2012, TENTE International, www.tente.com, 02/09/2012