# Product Information

## FVP300x85-Ø30

EAN 4031582319538

Wheel center made of cast iron, Tread: solid rubber, black, precision ball bearing

| Technical Data | |
|---|---|
| Wheel diameter | 11.81 in |
| Tread width | 3.35 in |
| Axle Hole-Ø | 1.18 in |
| Hub length | 3.54 in |
| Temperature | - 4 / + 185 °F |
| Standard | EN 12533 |
| Weight | 31.852 lbs |
| Load capacity (dynamic) | 1765 lbs |
| Load capacity (static) | 3525 lbs |
| Hardness of tread | A 70 Shore |

| | |
|---|---|
| Roll performance | ++++ |
| Movement noise | ++++ |
| Attrition | +++ |
| Corrosion resistance | ++++ |

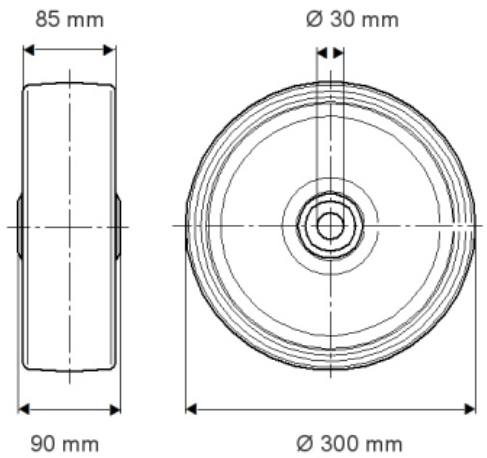


© Copyright 2012, TENTE International, www.tente.com, 05/21/2012

# Product Information

## FVP300x85-Ø30

EAN 4031582319538

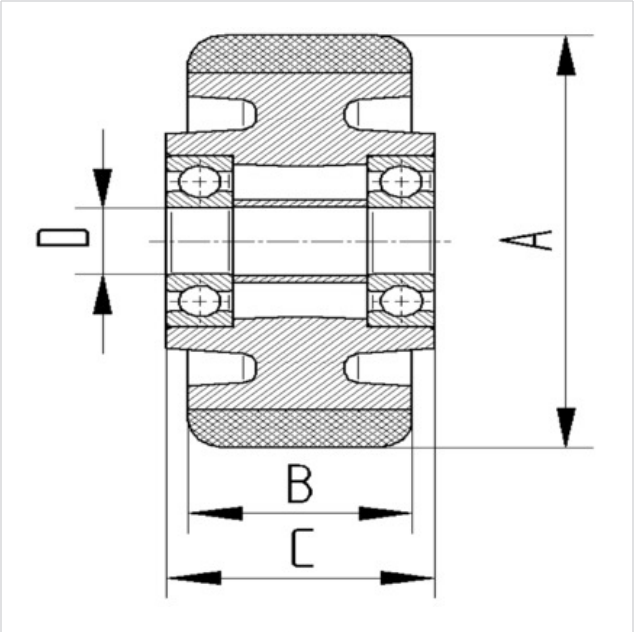


© Copyright 2012, TENTE International, www.tente.com, 05/21/2012